Previous Page

ELECTRO - ACOUSTIC TRANSDUCERS

ROHS COMPLIANT

PART NUMBER:
BRT0704P-01

Search

SPECIFICATIONS:

RATED VOLTAGE:	1.5 VDC
OPERATING VOLTAGE:	1.0 ~ 3 VD
MAX CURRENT:	80 mA
SOUND OUTPUT LEVEL:	70dB @10CM
TERMINAL TYPE:	2 PINS
RESONANT FREQUENCY:	2730 Hz
OPERATING TEMPERATURE:	-20 TO +80 °C

Search

TONE MODE:	CONTINUOUS
COIL RESISTANCE:	8 ± 1 OHMS
FRAME DIAMETER:	6.7 mm
FRAME DEPTH:	3.6 mm
MOUNTING DIMENSIONS:	3.0 mm
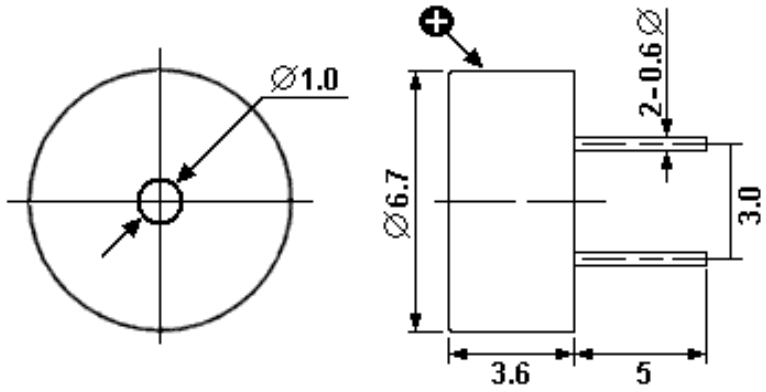
DIMENSIONS: